COMPANY NEWS:

Travel comfort for Berliner Verkehrsbetriebe

▶ 5

NEW TECHNOLOGIES:

E-mobility demands on workshops

▶ 12

TECHNIK SERVICE NEWS

PUBLIC TRANSPORT COURIER I ISSUE 01.19

TITLE STORY

HEAT PUMP SYSTEMS IN ELECTROBUSES

▶ 3

Dear Readers,

As the new Head of After-Sales with 21 years of professional experience and related expertise in the utility vehicle sector, I am pleased to welcome you. I look forward to working with you and engaging in an ongoing dialogue.

One of my priority goals is to promote the expansion of the European sales partner network in order to guarantee impeccable customer service. The transition from the diesel age to electromobility calls for a new way of thinking for all those involved, including manufacturers, suppliers and municipal transport authorities. For this reason, we are engaged in intensive discussions with operators and workshops concerning the new demands placed on electromobility. Numerous product training sessions on this topic have already been held by Valeo TCV, and our programme will be continued in the future. For more on the demands placed on workshops for e-mobility please turn to page 12.

This first issue of Technik Service News in 2019 is indeed devoted largely to the topic of e-mobility. In our title story we explain the operating principle of the heat pump in electrobuses, and in the article "Diesel heating in the e-bus" we describe the relevance of diesel heating that still today enjoys this status in the e-bus.

In addition, we outline the historic development of the Citysphere modular air conditioning system that celebrated its 10th anniversary last year, and as a thank you we will be giving a specially-designed Citysphere T-shirt to every customer placing a first-time order in 2019. Read more on page 6.

In our Technology section in this issue we explain the hydraulic calculations of duct systems, and in an article on the a/c system maintenance we stress the importance of cleaning air conditioning systems.

We are already looking forward to a constructive dialogue at busworld in Brussels in October, and hope you enjoy reading the current issue of Technik Service News!

Christian Schilder

CONTENTS

LEGAL NOTICE / CONTACT

Publisher:
Valeo Thermal Commercial Vehicles Germany GmbH
Friedrichshafener Str. 7, D-82205 Gilching
www.valeo-thermalbus.com

Editor:
Fabienne Ehmann
Tel.: +49 (0) 8105 7721-828
fabienne.ehmann@valeo.com

The REVO-E R744 with its newly-developed, automatic defrosting device enables highly efficient use in the electrobus even at outside temperatures as low as -20°C.

HEAT PUMP SYSTEMS IN ELECTROBUSES

The range of electrically powered buses is directly dependent on the capacity of the electrochemical energy storage unit, the traction battery. Depending on the geographic region and operating conditions, the electric energy requirement for heating the vehicles is sometimes greater than for driving itself. The Li-ion batteries used are currently unable to store a sufficient amount of electric energy. Especially on cold days, this results in a considerable reduction in the vehicle's range. In order to limit as far as possible the weight and thus also the costs for traction batteries, the energy requirement for heating the vehicles must be kept at a minimum. Against this background, there is a clear need for innovative and efficient heating systems for buses.

Efficiency of heating processes

The required heating capacity can be supplied to vehicles in a variety of ways. The essential question is: with which of the different options is the greatest efficiency to be obtained? The parameter "coefficient of performance" (COP) is often used to evaluate the efficiency of heating processes. Basically, the COP sets the benefit in relationship to the costs. In the case of heating with an electric heater, for example, this means the ratio of useful heat generated to the electric energy consumed. Provided that the supplied electric energy is fully converted to useful heat, at best this results in a COP of 1. The required heating capacity can, however, be supplied more efficiently and thus with less energy consumption via a so-called heat pump.

How does a heat pump work?

The term heat pump is currently on everyone's lips, but what is a heat pump precisely and how does it work?

First of all, a heat pump absorbs the thermal energy stored in the surrounding air. Essentially, this occurs at lower ambient temperatures.

The largest amount of heat is thereby transferred from the surroundings to the working medium by a change in the state of aggregation (transition from the liquid to the gas form). Working mediums may be easily vaporisable liquids, so-called refrigerants. In the condenser, heat is extracted from the ambient air. The refrigerant vaporises with the aid of the absorbed thermal energy and the energy content of the refrigerant increases by precisely the amount of absorbed thermal energy. Due to the low temperature in the evaporation process, however, the absorbed thermal energy is not yet utilisable for heating purposes, as according to the second principle of thermodynamics a heat flow can only take place from hot to cold.

Against this background, for heating purposes the absorbed thermal energy must be raised (pumped) to a higher and thus usable temperature level. This process takes place in the compressor by supplying electric energy. By compressor power the refrigerant, and thus the thermal energy stored within, is pumped to a temperature level suitable for heating purposes. The thermal energy is subsequently delivered to the passenger compartment through the liquefaction of the compressed refrigerant in the condenser. The downstream expansion valve expands the liquid refrigerant from the high pressure- to the low pressure side and regulates the mass flow to the condenser, whereby the process cycle is closed.

A heat pump consists of components that are identical to an air

conditioning unit. The four main components are: compressor, condenser, expansion valve and condenser. As shown in Fig. 1, the heating function in an existing air conditioning system can thus be realised through a relatively simple reverse circulation. For heating in buses this is a highly interesting approach.

As described above, with heat pump systems a large part of the useful heat (approx. 75 %) can be provided free of charge by environmental energy. Only the remaining 25% must be drawn from the traction battery, in order to raise the absorbed thermal energy to a usable temperature level. The best-possible COP values are achieved with this process at the highest possible evaporating temperatures and the lowest possible condensation temperatures. However, this results in a low temperature level of heat emission in the vehicle interior (lower injection temperatures) and a higher temperature level in heat absorption (temperature of the ambient air via the external heat exchanger in the heat pump system of the condenser).

Risk of the heat exchanger icing at low outside temperatures

If the heat pump is operated at outside temperatures of below 7 °C, there is a risk of icing of the heat exchanger. The water vapour in the air condenses and freezes. The result is ice formation on the fins, which in turn reduces the heat transfer. The evaporating temperature falls steadily, and with it the level of efficiency. To enable the system to continue operating in heat pump mode, a so-called defrosting device is required. This problem has been solved in Valeo's latest system generations with a newly developed, automatic defrosting device, enabling long-term and highly efficient use of the system. The ice-bound external heat exchanger (condenser in heat pump operation) is directly impinged with hot refrigerant from the compressor and the ice coating quickly melts.

The right refrigerant

In addition, the choice of refrigerant is immensely important. The latter should have good thermodynamic properties, a high volumetric cooling capacity and good miscibility with the refrigerant oils. It must be chemically and thermally stable, non-combustible and above all non-toxic and environmentally safe. To make the thermal energy in the surrounding air usable for heating purposes even at low temperatures, the refrigerant should enable evaporation at temperatures as low as -30 °C. This means that the boiling point of the refrigerant should be at an atmospheric pressure lower than -30 °C. The lower limit (system pressure > 1013.25 mbar) ensures that no ambient air is taken in by the system due to leakages in heat pump operation.

These requirements are only partially fulfilled by the refrigerants currently used in bus applications, the so-called CFCs, i.e. hydrochlorofluorocarbons. In addition, increased global warming due to greenhouse gases – including refrigerants – must be minimised. Accordingly, refrigerants with the lowest possible global warming potential (GWP) should be used. Refrigerant R744 (CO_2) is an alternative here. Compared to refrigerant R134a with a GWP value of 1430, refrigerant R744 (CO_2) has a GWP of 1 and an extremely high volumetric cooling capacity. Taking into account the low evaporation temperatures, R744 is predestined for use in a heat pump system.

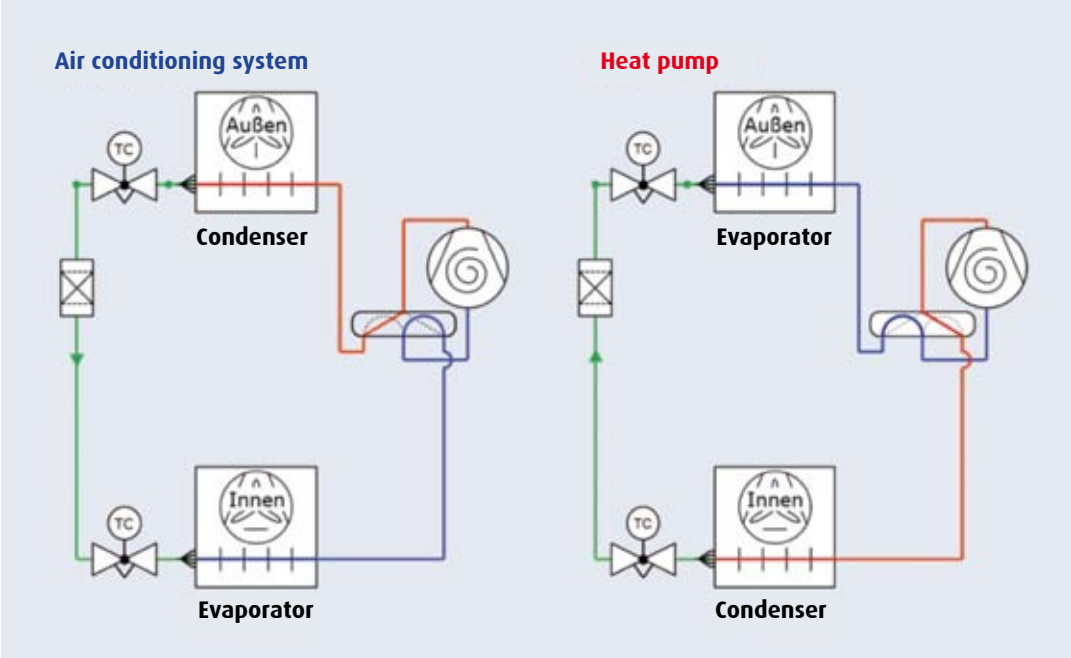

Fig.1: Schematic design of an air conditioning system with heat pump.

Mercedes-Benz Citaro articulated bus with Citysphere modular air conditioning system for BVG.

Major order

TRAVEL COMFORT FOR BERLINER VERKEHRSBETRIEBE

Valeo is equipping up to 600 Mercedes-Benz Citaro articulated and 350 solobuses with the Citysphere modular air conditioning system. A total of approx. 4,000 a/c units will be delivered to Mercedes Benz in the period from 2019 and 2027. Berliner Verkehrsbetriebe (BVG) has signed outline agreements with Mercedes-Benz for the delivery of the buses. No purchase commitment exists on the part of BVG. The number of diesel vehicles purchased depends on the market development for e-buses.

The low refrigerant filling capacity and hermetically sealed cooling circuit make the Citysphere system virtually maintenance-free and ensure unparalleled low life-cycle costs. In addition, the driver's section and passenger compartment can be regulated separately. The driver can thus set the temperature according to individual needs, and the temperature of the passenger compartment – as always with the Citysphere – is regulated automatically, depending on the outside temperature.

Public service buses with Valeo air conditioning systems have now been operating in Berlin for several years. These include 365 Scania Citywide buses with REVO 360 that were put into service in the period 2015 to 2018. Five years ago two Solaris U18 buses equipped with the Citysphere were tested on BVG routes.

Valeo presents its latest findings on the topic of heating in the e-bus

10TH VDV CONFERENCE FOR ELECTROBUSES

The VDV Conference and Trade Fair "Electrobuses – Market of the Future!" was held for the tenth time at the ESTREL Hotel in Berlin from 5-6 February 2019. For Valeo it was a good opportunity to introduce the subject of "Heating in the Electrobus" and present its energy-efficient heating systems for electrobuses.

Visit to the Valeo trade fair stand: from right to left Philip Thetens (Technical Project Manager for New Bus Technologies, FFG), Frank Färber (Director of Sales, Valeo TCV) and Thomas Frevert (Managing Director, Lex & Hesse GmbH).

In order to ensure that the limited electric energy of traction batteries is used as efficiently as possible in the electrobus, there is a need for innovative and efficient heating systems. In the "Boulevard of Ideas" at the 10th VDV E-BUS Conference, which gives exhibitors an opportunity to present new technical concepts and components, Frank Färber (Head of Sales at Valeo TCV) discussed how energy-saving heating is possible in the e-bus through the combined use of heating systems. "Currently there is no isolated solution for heating electric buses that can be used in all climatic conditions. We must identify a holistic solution in which the different systems are optimally coordinated and achieve the greatest degree of efficiency in interior heating as a function of the environmental and vehicle situation. Particularly against the background of range optimisation, the fuel-operated heater may continue to be a meaningful component in the overall system (on account of the low electricity consumption)," says Frank Färber.

The conference with trade fair offers an ideal opportunity to engage in discussions with representatives from transport undertakings, industry and politics related to electromobility in buses and return home with new insights.

10 YEARS OF CITYSPHERE – FROM THE BEGINNINGS TO TODAY

Today the Citysphere modular air conditioning system is an integral component of series production at almost all major vehicle manufacturers. In the DACH region alone approx. 13,000 buses are now operating with a Citysphere on their roof. But the path to success was not always easy: particularly in the early stages, representatives of the former Spheros GmbH (today Valeo TCV) had a hard job convincing potential customers.

At the time of the product launch in 2008 many transport undertakings considered air conditioning to be impractical on the grounds that maintenance and extra fuel consumption were prohibitive. Initially, efforts were focused on gaining the trust of customers and demonstrating that the new air conditioning solution was effective without incurring additional costs. In product roadshows and face-to-face meetings with public transport undertakings, customers had an opportunity to experience the system first-hand – and they gradually allowed themselves to be persuaded.

In 2008 the first order was received from Autobus Oberbayern GmbH, and over time this conviction on the part of the customers resulted in OEMs citing the system as a CSR (customer-specific requirement). Today the Citysphere is a city bus air conditioning system that has revolutionised the market in the moderate climate zones of Western Europe. Last year it celebrated its 10th anniversary.

Special offer: Citysphere T-shirts for first-time orders in 2019

On the occasion of the 10th Citysphere anniversary, in 2019 every new customer will receive a specially designed Citysphere T-shirt from trigema for his or her first Citysphere order. Just contact your personal regional manager.

Valeo presented itself for the first time at the relatively new and small trade fair BUS2BUS in Berlin.

VALEO AT BUS2BUS 2019

Valeo took part for the first time at the BUS2BUS trade fair in Berlin from 19 to 21 March 2019. This year the small, fledgling event – a combination of trade fair, bdo congress and Future Forum – was held for the second time at the Berlin Exhibition Centre.

The Valeo trade fair team, from left to right: Christian Schilder (Head of After-Sales), Jürgen Hoffmann (Regional Manager After-Sales), Fabienne Ehmann (Marketing and Communications Manager) and Christian Schmidt (Head of Application Technology) (all from Valeo Thermal Commercial Vehicles).

Over 100 exhibitors from 13 countries presented their product portfolios. The event was visited by 1,700 participants from 34 countries who informed themselves about the latest topics in the bus industry. Despite the modest attendance figures, Valeo was able to draw a positive balance.

The central topic at the Valeo trade fair stand was electromobility. With the new REVO-E Pro the air conditioning specialist celebrated a world debut. The new rooftop air conditioning unit for electrobuses was designed for heating and cooling in electrobuses. With its heat pump technology it provides efficient heating in the electrobus even at outside temperatures as low as -15 °C (with refrigerants R449A and R407C) and enjoys a unique position in the market.

In addition, the Product Group TCV (Thermal Commercial Vehicles) exhibited high-performance HVAC components such as the reduced-emission heater Thermo plus, which is ideal for use in the electrobus on account of its unrivalled low emission values and SPump pump generation with the new PWM and CAN versions.

Orders are despatched on a daily basis from the Fast-Way after-sales logistics centre.

Expansion of the after-sales logistics centre

FAST-WAY 2.0: MORE PERFORMANCE FOR SALES PARTNERS

Valeo TCV Germany continues to write the success story of Fast-Way and has reorganised the Europe-wide shipment of spare parts.

Launched over three years ago as an alternative fast delivery channel for spare parts for air conditioning units, heaters and hatches, the Fast-Way warehouse has since become a reliable order- and dispatch route. Round-the-clock availability in the online portal and day-to-day deliveries create the necessary prerequisites for transparency and speed.

"With its Europe-wide service, the after-sales sector remains a top priority for the company," says former Head of After-Sales and current Director of Valeo TCV Germany Carsten Schmidt, "That's why we must continue to focus on the performance of our spare parts logistics service.

"In more specific terms, this means expansion of the Fast-Way warehouse in Neckartailfingen near Stuttgart as a Europe-wide after-sales logistics centre for the supply of spare parts for Valeo TCV Germany. From mid-2019 it will gradually assume full control of deliveries to our sales partners.

In future, the approx. 2,500 different articles offered in the annual gross price list of Valeo TCV Germany – ranging from A for Aluminium to Z for Zinc – will be in stock at Fast-Way 2.0. That is the company's goal when it comes to the spectrum of available parts, whether it is a burner head, circulation pump or retrofit air conditioning unit. The quantity of articles in store will also be significantly increased and adjusted to the seasonal peak demand. Articles that are newly introduced into the online portal will be labelled so they are easier to find. At specific time intervals, sales partners can also look forward to special Fast-Way sales campaigns.

RECANVIS SF: VALEO SALES PARTNER IN SPAIN AND PORTUGAL

Recanvis SF, with headquarters near Barcelona, is the official Valeo sales partner for Spain and Portugal. The primary figure behind the business is Sergi Fernandez Fraga (Director).

Fernandez Fraga can draw on 20 years of experience in the bus industry and was employed for five years as Technical Manager of former Spheros Iberica GmbH. Fraga operates about 40 workshops in Spain and Portugal with the support of partner Manuel Expósito Gonzalo from Madrid. In addition to supplying the workshops with spare parts, repair and maintenance services, they act as on-site application engineers and are responsible for all Valeo product matters in Spain and Portugal.

Training

Another key component of the service portfolio is the regular training sessions on Valeo products. These are held at the premises of local transport operators and workshops or organised by Recanvis SF in the Barcelona region. A training session on the REVO-E rooftop air conditioning unit took place in Mataro (Spain) on 12 February for engineers of public transport undertakings from Barcelona and Pamplona who operate VOLVO bus fleets equipped with the REVO-E. The training session was led by Klaus Flörsheimer (International Trainer, Valeo TCV). At this one-day workshop he explained the operating principle of the rooftop a/c unit, including the necessary maintenance, possible errors and steps to correct them. The event was concluded with a brief overview of new products.

Manuel Expósito Gonzalo and Sergi Fernandez Fraga (right).

Klaus Flörsheimer holds a training session in Mataro (Spain) on the REVO-E rooftop a/c unit.

WE LOOK FORWARD TO MEETING YOU

	Date	Trade fair	Location
May	07–10.05.2019	FIAA Madrid	Madrid, Spain
June	09–12.06.2019	UITP Global Public Summit	Stockholm, Sweden
April & June		Solarisposium	Poland
October	02–03.10.2019	Coach and Bus UK	NEC Birmingham, UK
	18–23.10.2019	Busworld Europe Brussels	Brussels, Belgium
November	21–23.11.2019	Czechbus	Prague, Czech Republic

NEW LOCATION OF OMNIBUS ELEKTRONIKS & SERVICE GMBH

Customer orientation with an appropriately broad product and service portfolio – for over 25 years that has been the company motto of Christian Ziche, Manager of Omnibus Elektroniks & Service GmbH (OES).

OES has been a sales partner of Valeo TCV since September 2014, and in addition to initial assembly and special installations it also offers a repair service with associated spare parts service. The particular strengths of the company lie in the retrofitting of air conditioning systems such as the City- and Minisphere, as well as individual customer solutions. Its product portfolio also includes the servicing of air conditioning and heating systems at the customer's premises (throughout Germany). "We are a small, modern enterprise that prides itself in agile and flexible response to its customers' needs," says 56-year-old Manager Christian Ziche. He is now supported in these aims by Co-Manager Michél Bovie.

On account of the constantly increasing number of customers and workshop services, the nine-years-old facility at Drahtzieherweg 5 in Willich with 2,800 m² (warehouse floor space of 360 m² and two bus lanes) had become too small for the company's operations. In autumn 2018 it therefore moved to new premises in a building complex at Siemensweg 111 in Willich. OES has thus expanded to encompass a total floor area of 7,100 m², of which 1,200 m² is workshop space with seven bus lanes and a logistics area of 600 m². The new site now enables major contracts to be carried out on the premises. These include the installation of the Citysphere modular air conditioning system on 52 new Scania vehicles and maintenance work on the air conditioning and heating systems in 200 vehicles of city bus operator BRH viabus. The new facility has room for both solo and articulated vehicles.


Christian Ziche, Manager


Michél Bovie, Co-Manager

DIESEL HEATING IN ELECTROBUSES

It is an economic reality that the purely electric heating of a bus has a negative effect on the range of a vehicle. This becomes clear in a comparison of the calorific value of conventional diesel (or alternative fuels) and today's batteries.

In figures: approx. 74 kg cell weight of a LI-ion battery would be needed to replace one litre of diesel fuel. At approx. 10 litres daily diesel consumption for heating a 12-metre city bus (at an outside temperature of approx. -15 °C) that means an added battery weight of about 740 kg.

It goes without saying that a prime objective of Valeo is the reduction of pollutants, and in the long-term completely emission-free driving and heating. On the face of it, it makes no sense to install a diesel heater in the electrobus. From an energy balance point of view, in conjunction with a heat pump or electric heater – particularly at low outside temperatures – the fuel-burning heater can be a critical component in the overall system. Coordinated systems with an innovative regulating strategy ultimately ensure efficient heating of the interior.

In this respect, we would like to cite an interesting statement by Sascha Böhnke (Testing and Technology Editor, Omnibusrevue magazine) from his comment of the week:

"In the past few days numerous users have used the social media to complain that some of the new electrobuses to be delivered to Berlin in the coming months will be equipped with fuel-burning heaters. Similar "expert" opinions were expressed in the comments of the editors of certain daily newspapers, who can only think in terms of black or white. Such thinking is, however, out of place in this sensitive and above all complex topic.

Fuel-burning auxiliary heaters will, of course, continue to be necessary until battery manufacturers are able to supply more efficient batteries. Why should we put additional burden on the limited onboard energy resources by adding energy-hungry electric heating when there is a significantly more efficient heating solution in the form of diesel or gas heating? In contrast to a diesel motor that propels a vehicle and has an average efficiency factor of only about 30%, the corresponding value of a modern diesel heater is over 90%. Moreover, the latter's consumption rate amounts to only four litres per 100 kilometres – and that only in winter. Admittedly, an electrobus can be heated by electricity only, by using intelligent heat pump systems. But it is hardly comparable with the comfort and warmth of conventional heating systems. That is already evident at outside temperatures around freezing point. Lucky are those who only need to travel a short distance in the EU-compliant, lightly heated e-bus.

This one example demonstrates the importance of a differentiated and holistic approach to such emotionally charged issues such as electromobility. Those who pursue the debate burner versus electric drive with missionary zeal have not understood how the energy- and mobility turning point can be mastered."

At this point it should also be mentioned that Valeo fuel-burning heaters reflect a high level of technical perfection and, already today, exhibit extremely low emission values. Added to this, the company continues to work on improvements.

E-bus section of the FFG vehicle workshop Falkenried GmbH in Hamburg.

E-MOBILITY DEMANDS ON WORKSHOPS

The transition to emission-free public transport, in particular with regard to nitrogen dioxide pollution in cities, is a complex subject that should be discussed not only from the standpoint of purchase and operation of e-buses.

The use of e-buses with HV (high voltage) systems result in new challenges to workshops in respect of maintenance and repair. The latter must be checked for suitability and modified as necessary, changes made in operational procedures, workshop facilities expanded, risk assessments prepared and the qualifications of the engaged technicians expanded. Consideration must be given not only to the HV power electronics, drive set, energy storage and other components relevant for the operation of e-buses, but also to HV air conditioning units and heaters. At this point mention should also be made of the German Safety and Health at Work Act (ArbSchG) and Industrial Safety Regulations (BetrSichV), as these regulations oblige companies to define possible hazards to employees while performing their duties, and derive suitable protective measures.

Roof working structure for maintenance work on the e-bus, double-sided access and stationary.

Technical requirements for workshops

Due to the diverse configurations of energy storage concepts in e-buses there are also differing technical requirements for workshops. Conventional workshop concepts with pits or vehicle hoists and simple roof access work platforms no longer suffice. In some cases the minimum height of the workshop is already a problem due to the crane requirement for e-buses, as the rough calculation (vehicle height + 2m working height + crane height) results in a minimum required height of 10 metres. In addition to workshop height, the workshop crane, roof working structure, aggregate jack, HV tools, test equipment and personal protective gear are further investments that must be taken into account.

Safety at the workplace

The observance of occupational safety according to DGUV is a key requirement. When working on HV systems the work area must be secured against unauthorised access, and vehicles equipped with HV components must be clearly marked. According to BGV A8, warning sign W08 must be used to safeguard the workplace and warn of vehicle hazards. In workshops in which a physical separation is not possible, the workplace must be cordoned off by a chain or tape with warning signs. Prior to the start of work on HV buses by qualified staff, a first-aid worker must be present, a defibrillator must be close at hand and the required personal protective gear (PPG) must be provided.

Personnel requirements and qualification

The demands made on staff when working on HV vehicles are specified in BGI/GUV-I 8686, DGUV Information 200-005 and other DIN standards. The demands are fundamentally different to those of the "diesel age". Workshop operators who are new to this sector are often confused by terms such as "certified HV bus electrician" or "HV intrinsically safe vehicle". Qualification measures for staff are regulated in stages and range from electronically instructed personnel for non-electrotechnical tasks on

buses to the skilled electrician for work in the de-energised state, the electrician for trouble-shooting and testing under voltage and the supervising electrician. Furthermore, an orientation by the vehicle manufacturer is also necessary.

Work on HV systems may only be performed by a certified HV bus electrician or under the supervision of the latter. Non-certified persons are not authorised to work on buses with HV systems.

A trainer for work on HV buses (HV bus trainer) is a must for companies that offer in-house training.

Valeo TCV checks HV capability of its workshops

The many demands made on workshops are factors that must be clarified by transport operators prior to the purchase of e-buses. For the operators of smaller fleets of e-buses, i.e. generally less than 20 vehicles, and independent workshops, it is questionable whether these investments will be amortised.

Component and system suppliers that offer service independently of vehicle manufacturers must evaluate the service network and the HV capability of the workshops. Valeo TCV is currently liaising with its partners Europe-wide in order to meet these demands.

MAINTENANCE OF VALEO BUS AIR CONDITIONING SYSTEMS

Like all vehicle components, air conditioning units are exposed to constant stress. In order to guarantee proper functionality and prevent damage to parts, the prescribed service work on the air conditioning unit must be carried out at regular intervals by qualified refrigeration technicians.

Valeo REVO rooftop air conditioning unit – accumulation of dirt between the roof and condenser.

Even the air conditioning system is not in operation, wear of individual components may occur due to normal ageing or stress during vehicle operation. It is therefore essential to carry out the checks specified in the maintenance and service schedule, regardless of the operating time of the system.

Removing dust, dirt and leaves from the air conditioning unit

Cleaning the air conditioning unit to remove dust, dirt, leaves or similar is a task that should not be overlooked while performing maintenance work. Particular attention should be given to the area below the condenser, a notorious dirt collector. If this is not cleaned during maintenance the unit may cease to function due to high pressure failure. Dust, dirt or leaves combine with moisture to form a homogeneous layer of dirt that clings to the underside of the condenser and obstructs the fins. Air is prevented from flowing unhindered to the condenser and the pressure rises, causing a malfunction. The high-pressure switch/pressostat switches off the air conditioning unit or compressor. In this case, cleaning the condenser is the only solution. Regular maintenance of the a/c unit also reduces refrigerant losses, which in view of steadily rising refrigerant prices represents a true added value.

Often the cleaning chore is extremely time-consuming and must be performed with care. If dirt has accumulated beneath the condenser, it can usually only be cleaned from above. For this purpose the condenser/fan must be dismantled. Neutral cold cleaning agents that remove the dirt from the fins have proven effective here. The condenser is flushed from top to bottom with a gentle jet of water. It may be necessary to repeat this process.

Customers will find the basic steps for maintenance work on a Valeo rooftop air conditioning unit in the maintenance and service schedule. Instructions for the different rooftop air conditioning units can be downloaded from the Valeo Thermal Bus homepage.

www.valeo-thermalbus.com/eu_de/Service/Downloads/Klimaanlagen

Valeo REVO rooftop a/c unit – dirt on the underside of the condenser.

INSTALLATION OF DIAGNOSTIC SOFTWARE FOR VALEO HEATERS

Included: diagnostic adapter, software CD, 2x test plug for Thermo S and Thermo plus (component test), adapter wiring harness and USB connecting cable to PC.

Our Thermo, Thermo S, GBW, Thermo G and Thermo plus series of heaters are diagnosable. In the Thermo E series a failure is signalled by the flashing signal of the switch-on indicator. In Thermo- and GBW heaters the vehicle-specific adapter wiring harness must be used, with the other series the plug for the diagnosis is in the heater wiring harness and in the Thermo plus on the control unit. The diagnostic plug is sealed with a watertight dummy plug. The Thermo S and Thermo plus are delivered with a test plug. Once the temperature sensor has been disconnected and the test plug inserted into the control unit, the component test can be activated. (Thermo S old – plug connection temperature sensor outside on heat exchanger: 11111723_; Thermo S new – cable with sleeve to control unit: 11117924_; Thermo plus 11120611_)

Currently, diagnostic software Version 1.4 is being shipped. This version and future updates can be downloaded from https://www.valeo-thermalbus. **https://www.valeo-thermalbus.com/eu_de/Service/Downloads/Heizsysteme/Diagnose-Vorwahluhren-Filter-Software**.

When installing the diagnostic software the following error message may appear "File FTD2XX.DLL not found". This error message means that a software driver has not been installed.

1. Please ensure that you have complete administrator rights for the computer
2. Delete all old diagnostic files (earlier versions and failed attempts)
3. Close all programmes and applications, including virus scanner
4. Insert the diagnostic adapter into the computer
5. Install the software

Caution! The Webasto diagnostic adapter is optically very similar to the Valeo adapter. Due to ongoing development, however, this adapter is not compatible with Valeo heaters. Use of the Webasto diagnosis may result in illogical error messages.

HYDRAULIC CALCULATIONS OF DUCT SYSTEMS

With regard to e-mobility and the accompanying limited electric energy, increasing importance is being attached to the optimum configuration of the cooling water circuit. Particularly heating at low outside temperatures reduces the capacity of the battery and thus the range of the vehicle. For this reason as little energy as possible should be allocated to auxiliary equipment of the vehicle, such as the heating and circulation pump.

The Fathom simulation software is used to perform hydraulic calculations of cooling water circuits for optimum design or optimisation of the system. The software requires input of the pump characteristics (performance), nominal width and length of the ducting, as well as all heat exchangers such as rooftop air conditioning unit, frontbox and sidewall heater, after which the flow rate in the water circuit is simulated. Subsequently an alignment is performed to determine whether the ducts have the right dimension and the pump has been correctly chosen. The Valeo SPump PWM/CAN, for example, adjusts exactly to the required flow rate and saves energy. The cooling water circuit thus has the optimum flow rate without over- or undersupply.

Furthermore, the duct diameter is checked in the simulation, and the optimum dimension is specified. Finally, the calculation shows whether the heat distribution is optimally set and each convector and/or the rooftop air conditioning unit is supplied at the correct flow rate.

Valeo TCV has been using this software for a number of years, particularly for complex water circuits such as in touring buses. In conventional systems empirical values and data were often used for dimensioning. Especially for e-buses, finer methods must be used in the configuration to ensure that the limited energy is used as efficiently as possible and the range of the vehicle is optimised.

With the above resources the Valeo application engineers can test a specific system and optimise it as necessary. Should you be interested in a calculation, the responsible regional manager will gladly assist you.

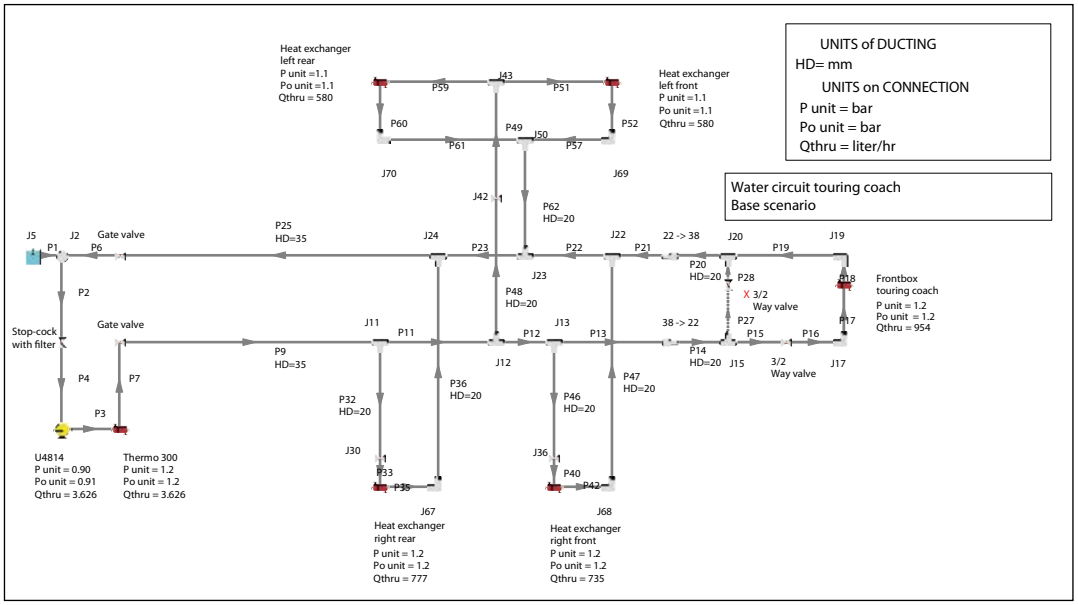

Fathom: example of a water circuit

Connection	Name	Vol. flowrate (m^3/hr)	Mass flow (kg/sec)	dp Stag. (bar)	dH (meters)	dT loss (deg. C)	Heat ratio inlet (kW)	T inlet (deg. C)
4	Thermo 300	3.6256	1.0625	0.01992	0.1925	n/a	n/a	21.29
18	Frontbox touring coach	0.9543	0.2797	0.12530	1.2111	n/a	n/a	21.29
32	Heat exchanger right rear	0.7767	0.2276	0.13088	1.2650	n/a	n/a	21.29
38	Heat exchanger right front	0.7347	0.2153	0.11852	1.1455	n/a	n/a	21.29
45	Heat exchanger left front	0.5801	0.1700	0.07812	0.7550	n/a	n/a	21.29
52	Heat exchanger left rear	0.5801	0.1700	0.07812	0.7550	n/a	n/a	21.29

Extract from results of Fathom calculation

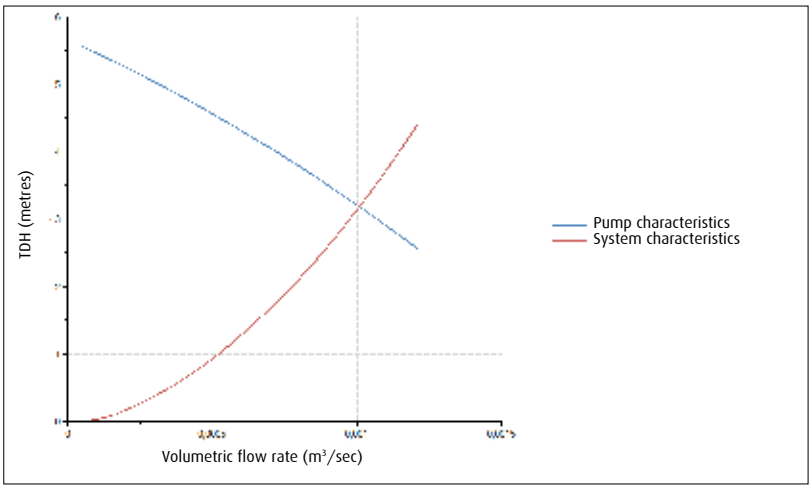

Pump system characteristics

Testing: trials in temperature and climate chambers

ENDURANCE TESTING OF HEATERS AND COMPONENTS

Diverse measures are necessary for the ongoing new- and further development of products and the monitoring of high quality standards. The test facility at the Neubrandenburg plant plays an important role here: Testing! Extensive trials on heater families and their components are carried out at the site.

Testing a heater burner in extremely cold conditions.

The construction of the test facility at the current site in Neubrandenburg began more than 10 years ago. In the meantime countless diesel-, gas- and electrically powered heaters have been exhaustively validated in various test labs, where climate chambers are used for practical simulation. Normal test environment conditions involve temperature ranges from -40°C to 125°C. The TC (Test Centre) was established in 2011 for testing the life cycle of components and heaters. This is where long-term endurance tests are carried out. Due to its open design, the TC enables individual components and heaters to be tested in central European temperature conditions. For real-life testing the specimens are operated in various cycles, whereby they are controlled and monitored by self-developed technology.

In the salt spray test chamber the corrosion behaviour of the product portfolio is tested, and weak points in the surface treatment relentlessly exposed.

In conjunction with the development and project quality, the trial validates the requirements from customer specifications and in-house standards. In the last few years there has been a constant increase in the demands and scope of testing.

Endurance testing of heaters

Endurance test rig for heater components

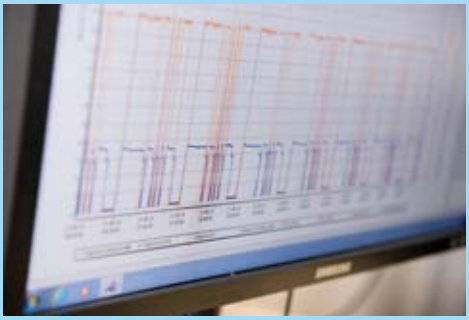

Test software for heater endurance testing